GRABIT CONFIGURATION "4"
Equipped with clamshell bucket and fixed link

PART LIST: GFL-2_FIX + GOA321/PE

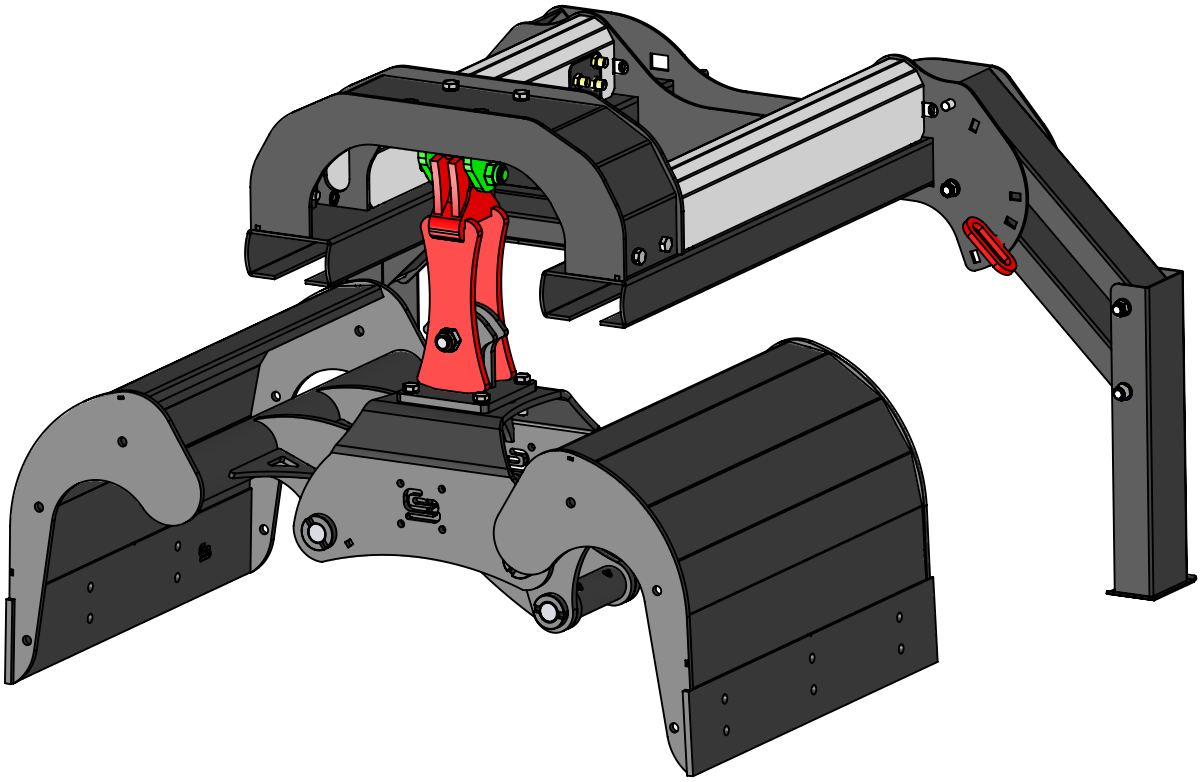

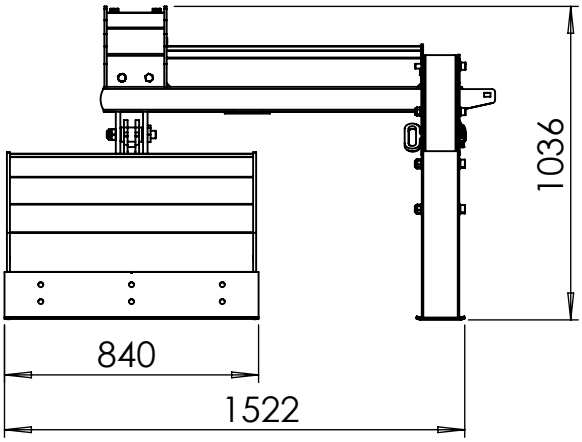

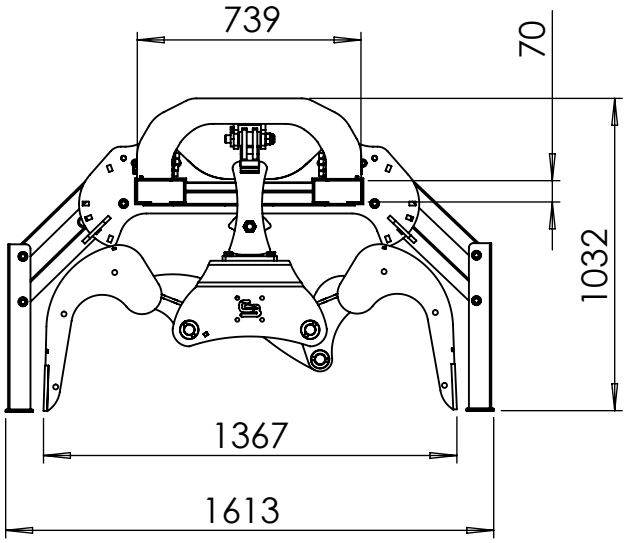

	Sug.Pressure	Oilflow
Grab	160-200 Bar	30-60 Lt/Min

GUSELLA BAKKER

MODEL:	VERSION:	DATE:	PAGE:
GRAB IT	1	11-24	1/1