The hoods with Hoisting hook

The hoods are bolted to the frame of the grab. A hoisting hook is mounted on each hood. Because the hoisting hooks are bolted they can easily be replaced.

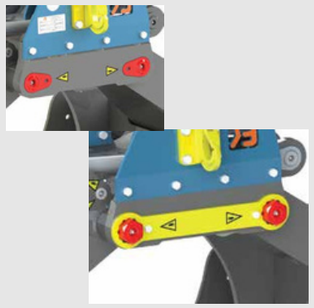

Locking devices

The main pins are secured by the locking devices on one side being sunk into the bridge plate and the nuts on the other side being secured with a locking plate.

Double steady link

The BDVEZ XL is equipped with two cross-placed steady links, which gives the grab extra stability and allows it to absorb more forces.

Type	Width	Capacity	Weight
BDVEZ XL 100	102 cm	650 L	550 kg
BDVEZ XL 120	122 cm	790 L	593 kg

GUSELLA BAKKER

6662 NG Elst (Gld) Netherlands
Nijverheidsweg 6
Tel. +31 (0)481-374757

info@gusella-bakker.com

THE MANUFACTURER MAINTAINS THE RIGHT TO MODIFY ALL PRODUCTS IN ORDER TO IMPROVE PERFORMANCE.

BDVEZ XL

Mukti-purpose grab

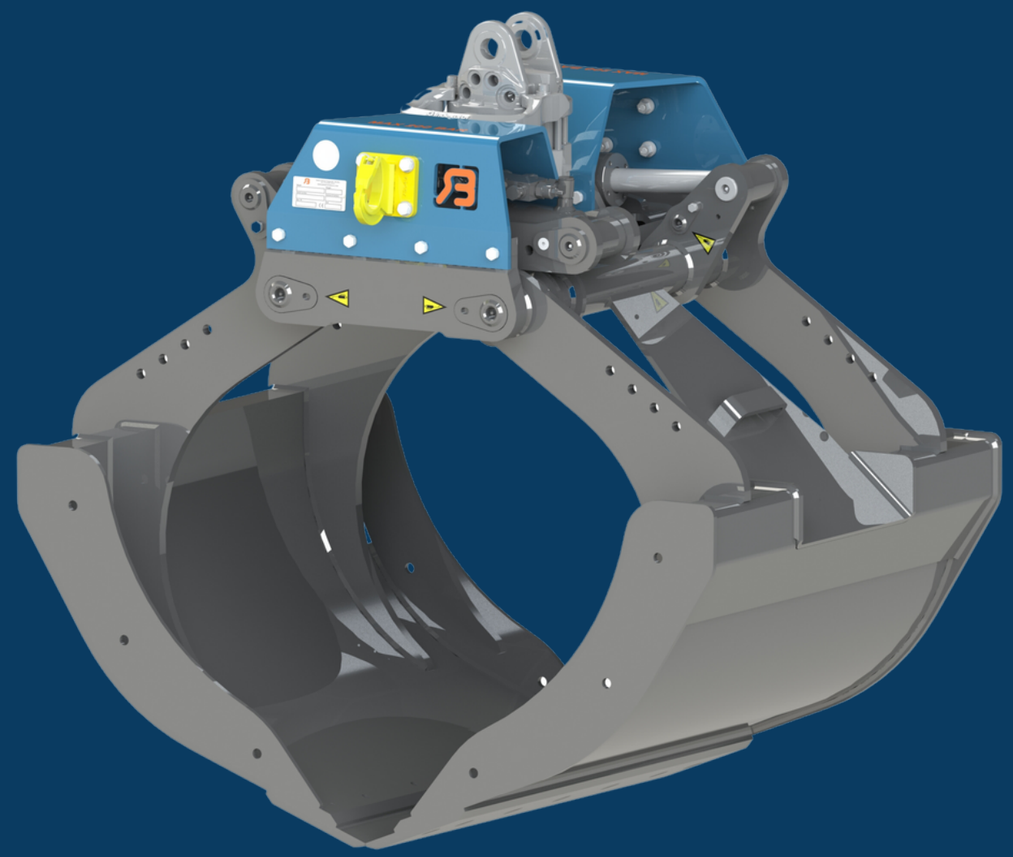

GUSELLA BAKKER

Grip opening

The BDVEZ XL has a large grip opening that can also be used to pick up road plates up to 1500 mm, etc.

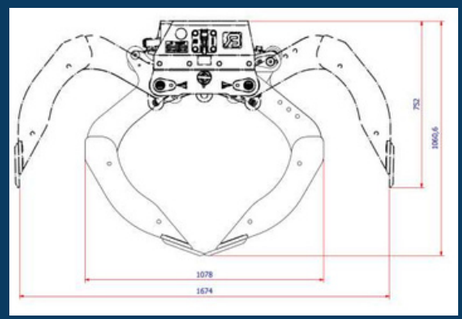

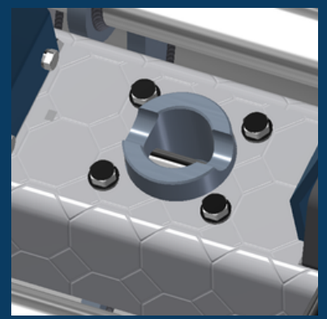

The hole pattern

The frame is equipped with the hole pattern for a rotator flange with 4 holes.

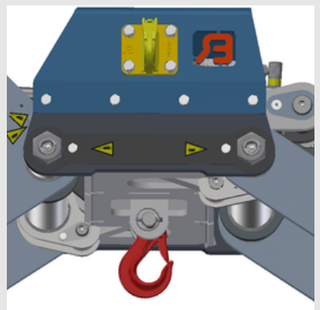

The extra lifting hook

An extra lifting hook is available as an option, which can be mounted in the middle under the bridge plate.
The BDVEZ XL therefore offers a lot of versatility.

The interchangeable blades

The BDVEZ XL is equipped as standard with wear-resistant interchangeable blades that are bolted to the shells. When the blades are worn, they can be unscrewed and turned over to use the other side.

Check valve

Due to a malfunction in the hydraulic system of the crane, the pressure in the cylinder can drop.
To prevent the load from falling out of the grab in such situations, it is equipped with a non-return valve as standard.

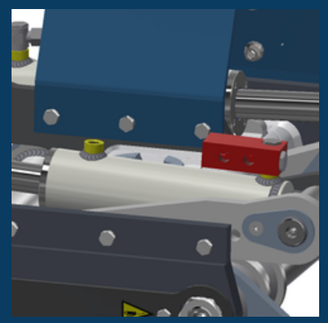

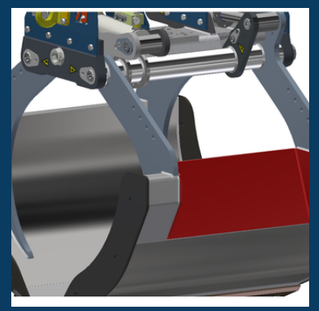

Mounting plate

To allow the grab to be folded onto the crane, one shell has a recess. The grab can be secured to a Z-crane when folding.

Accessories

For loading and unloading gravel, grit, etc., separate side plates are available as an option, which turns the BDVEZ XL into a closed grab.

It is also possible to install a set of road plate segments. This turns your BDVEZ XL into a road plate clamp that can easily pick up road plates with a width of up to 2000mm.

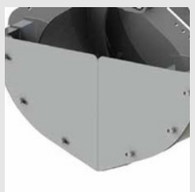

GUSELLA BAKKER